KANTO

YU4 G2

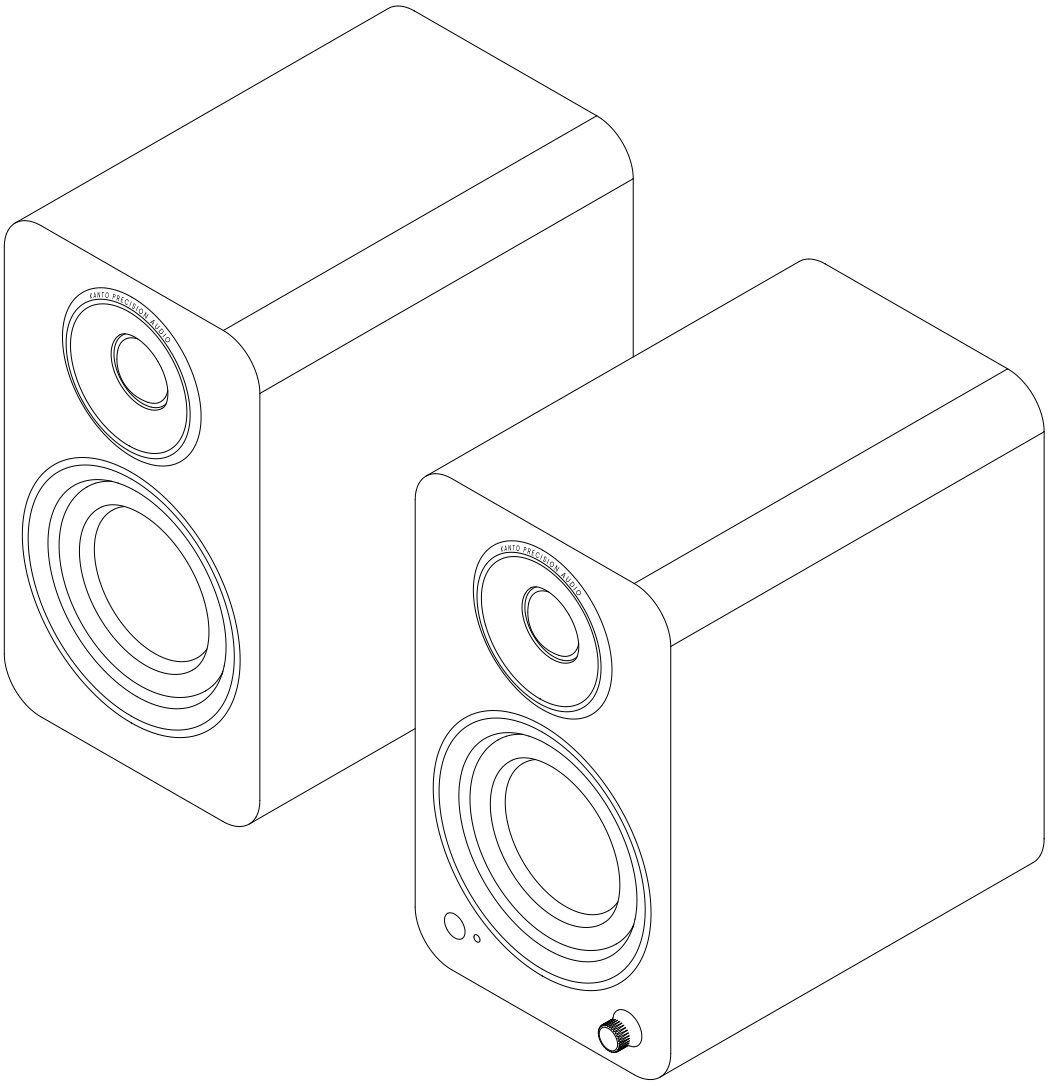

Powered Bookshelf Speakers

USB-C Connectivity

Bluetooth Connectivity

160 W Peak Power

Durable Laminate Finish

Thank you for choosing Kanto

Designed in Canada, Kanto Yu4 is made to bring clear, room-filling sound to everyday listening, with simple connections for your turntable, TV, computer, phone, or other audio sources. With built-in Bluetooth®, multiple wired inputs, and a subwoofer output, Yu4 gives you the flexibility to build a system that works for your space.

Before using your speakers, please take a few minutes to read this manual and the included safety instructions. They will help you set up your system correctly, get the best performance, and keep your speakers working reliably for years to come. Each Yu4 system is carefully tested and inspected before packaging. After unpacking, please check the speakers and accessories for any signs of shipping damage. If anything appears damaged or missing, contact your retailer before using the product.

You can also call Kanto directly at 1-888-848-2643 or email support@kantoliving.com.

Use the QR code or type in the URL to explore our website.
www.kantoaudio.com

What's in the box?

1x

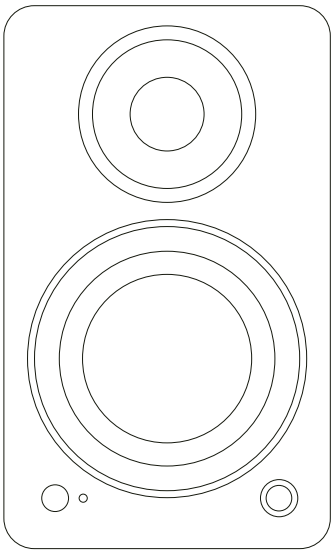

1x

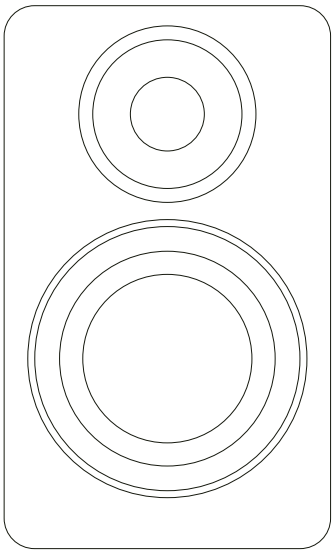

1x

1x

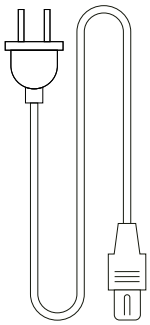

1x

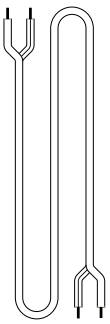

8x

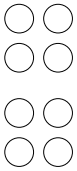

Speaker Overview

Front Panel (Active Unit)

1 1" Silk Dome Tweeter

2 4" Abaca Reinforced Paper Woofer

3 IR Remote Receiver

4 LED
- Teal — Aux
- Green — RCA
- Pink — OPT
- Yellow — USB
- Blue — Pairing (Flashing)
- Blue — Paired (Solid)
- Red — Standby Mode

5 Volume / Input Select / Standby / Wake-up

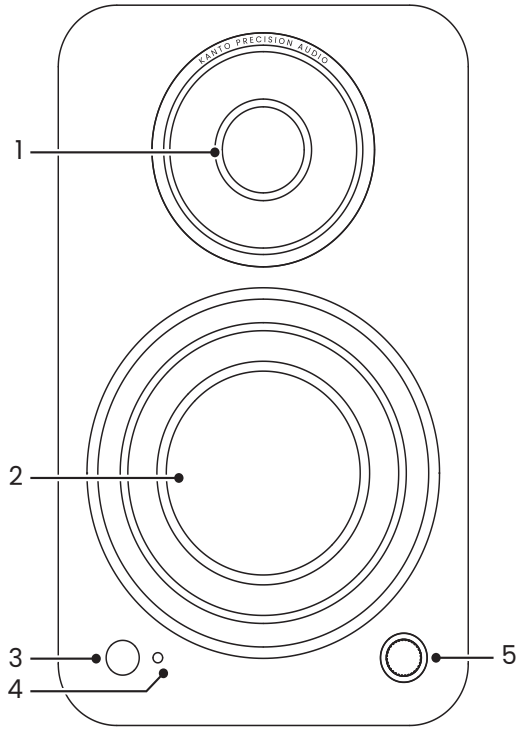

Rear Panel (Active Unit)

6 3.5 mm Aux Input

7 RCA Input

8 USB Input

9 Optical

10 Subwoofer Output

11 Phono Ground

12 Phono / Line Switch

13 L / R Switch

14 USB Charge Port (5 V 1.5 A)

15 On / Off Switch

16 AC Input Connection (100 V - 240 V)

17 Passive Speaker Output

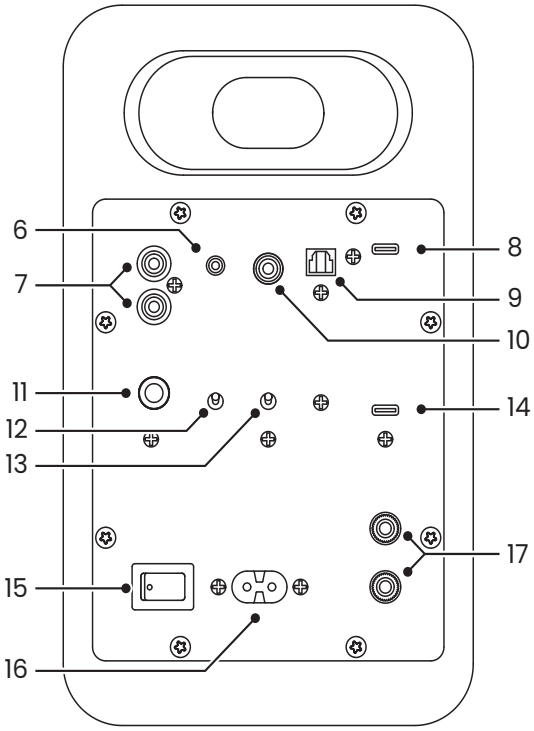

Volume/Input Select Knob

Yu4's volume knob functions as an input select knob as well. Press the volume knob to cycle through inputs.

Aux ➡ RCA ➡ Optical ➡ USB ➡ Bluetooth

Push and hold the knob to enter standby.

1a Remote Control

Install two AAA batteries in the back of your Yu4 remote. Remote control functions are listed below:

1 Standby Button
2 Mute
3 Decrease Volume
4 Increase Volume
5 Decrease Treble
6 Increase Treble
7 Reset Treble
8 Decrease Bass
9 Increase Bass
10 Reset Bass
11 3.5 mm Aux Input
12 Optical Input
13 Bluetooth® Input Select
14 RCA Input
15 USB Input
16 Bluetooth® Reset
17 LED Brightness
18 Subwoofer Mute
19 Factory Reset
20 Previous Track (Bluetooth® Operation)
21 Play / Pause (Bluetooth® Operation)
22 Next Track (Bluetooth® Operation)

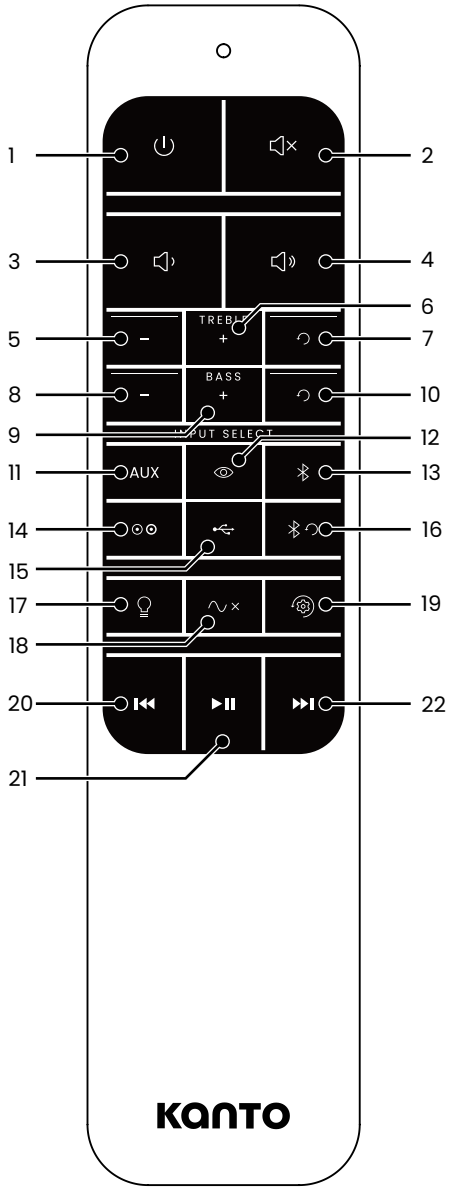

1b Setting Up Your Speakers

The Yu4 speaker system can be placed on a bookshelf or mounted on speaker stands. For best results, we recommend Kanto speaker stands.

The distance between the speakers, as well as their distance from the listener, affects stereo imaging. Placing the speakers too close together or too far apart may prevent the stereo image from fully developing.

In an average listening room, position Yu4 at least 8" from the rear wall. Because every room differs in size, shape, and furnishings, some experimentation may be required to find the best placement.

Moving the speakers closer to the rear wall will increase bass output but may reduce soundstage depth. Moving them farther from the wall will generally have the opposite effect. Avoid placing the speakers in room corners, as this can overrepresent low and midrange frequencies.

If space along the rear wall is limited, angle the speakers slightly toward the listening position to help reduce reflections. Room characteristics and speaker placement can significantly affect performance, so take some time to find the position that sounds best in your space.

Connecting the Speakers

Ensure the **On / Off switch** is in the Off position.

Connect the powered speaker to the passive speaker, using the supplied speaker cable, as shown below. Connect the **Red (+)** and **Black (–)** terminals on the powered speaker to the corresponding terminals on the passive speaker.

If you need to position the speakers farther apart than the supplied cable allows, use a heavier-gauge speaker cable to minimize signal loss.

Follow the instructions on the following pages to connect your audio sources to Yu4.

Connect the power cord from the powered speaker to a wall outlet.

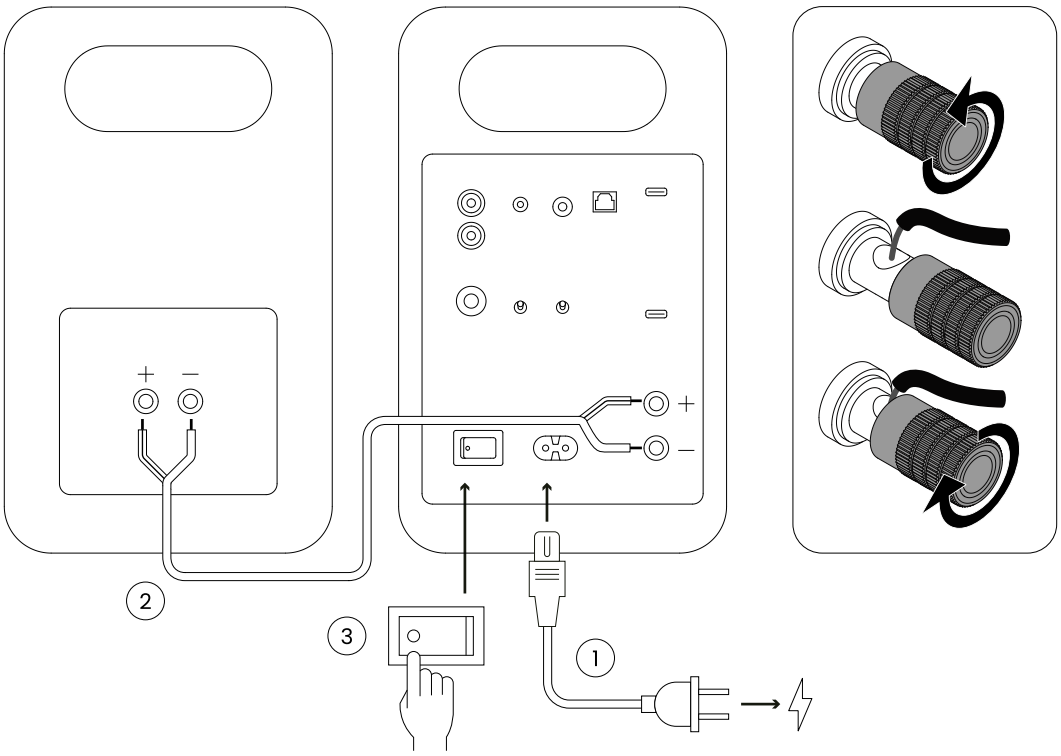

ATTENTION: When connecting audio cables the ON / OFF Switch must be turned OFF. After connecting all cables, the unit can be turned ON. When the volume is high, this system can produce noise levels that could permanently damage your hearing. Yu4 is a powered speaker system. Do not connect the speaker terminals to the speaker inputs of a stereo amplifier. Damage may occur. Use only the power cord provided with the speakers.

2a Connecting Audio Sources

Yu4 offers five ways to connect your audio sources: 3.5 mm Aux, RCA with a selectable phono preamp, optical, USB-C, and Bluetooth. All incoming audio, including analog signals, is processed through Yu4's digital signal path, which supports playback up to 24-bit/96 kHz, ensuring all sources are handled at high resolution.

- **3.5 mm Aux —** phones, laptops, tablets, and portable players with a headphone or line output.
- **RCA —** turntables (using the selectable phono preamp), CD players, and other line-level components. See (2b) Connecting a Turntable.
- **Optical —** TVs, game consoles, and disc players with an optical digital output.
- **USB-C (Audio) —** a direct digital connection from a computer, phone, or tablet.
- **Bluetooth —** wireless streaming from a phone, tablet, or laptop, with AAC and SBC support. See (2d) Connecting Bluetooth.

2b Connecting a Turntable

The Yu4 RCA input features a built-in phono preamp, letting you connect a turntable directly without additional equipment. The 'Line/Phono' switch must match your source, or you risk poor audio quality or speaker damage. Set it to:

- **Line —** for line-level sources (most equipment, and turntables with a built-in preamp)
- **Phono —** for turntables without a built-in preamp

If you're unsure, set the switch to 'Line' first. If playback is very quiet, switch to 'Phono'.

ATTENTION: Certain turntables include a built-in phono preamp. If your turntable is equipped with one, set the RCA input switch to Line, not Phono. Applying a line-level signal to the phono preamp causes severe overamplification and can produce a sudden, high-volume output. The speaker's protection circuitry engages to limit the signal and reduce the risk of driver damage, but it does not replace correct configuration of the input switch. Damage resulting from improper use, including this scenario, is not covered under warranty.

2c Connecting via Optical

Set your source's audio output to **Stereo (PCM)**. The Yu4 decodes two-channel PCM only; many televisions and game consoles default to a compressed surround format that the optical input cannot reproduce, resulting in no sound or audible noise. Once the source is configured, select the Optical input.

2d Connecting Bluetooth

To use Bluetooth, select the Bluetooth input. Bluetooth is inactive while any other input is selected.

Upon selecting the Bluetooth input, the speaker attempts to reconnect to the most recently paired device while remaining available to pair with a new one. On your device, the speaker appears as "Yu4 by Kanto". The front LED indicates the connection status:

- **Blinking Blue —** Unconnected and available for pairing
- **Solid Blue —** Connected to a device

If the connected device disconnects, the speaker automatically returns to pairing mode. To return the speaker to pairing mode manually, press the **Bluetooth Reset** button on the remote.

Once connected, you can play, pause, and skip tracks from your device or from the playback buttons on the Yu4 remote. For the most reliable connection, we recommend keeping your Bluetooth® device within 10 meters of Yu4, in a clear, unobstructed space.

2e USB-C Audio

Connect a computer, tablet, or smartphone to the USB-C audio input near the top of the rear panel, then select USB as your active input. When using a computer, select Yu4 as the audio output device in your system settings. No additional drivers or software are required.

Mobile devices must support wired USB audio. If no sound is heard, confirm that your device's USB-C port supports audio output.

The USB-C audio input does not charge connected devices. For charging, use the separate USB power port on the rear panel, which does not support audio.

3 Additional Features

USB-C Power

The Yu4 feature one 5V / 1.5A USB-C port on the back panel, providing a convenient power source for devices such as Wi-Fi streamers, mobile devices, and smart home accessories.

The port remains active in both Playback and Standby modes, supplying connected devices with up to 1.5 A of power.

Connecting a Subwoofer

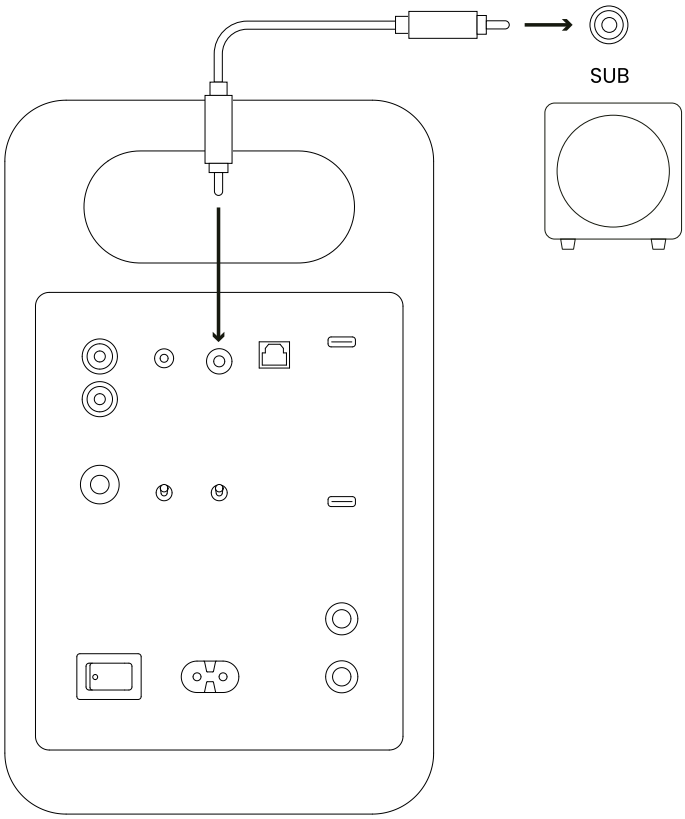

Automatic Subwoofer Filter

The Yu4 includes an automatic 80 Hz high-pass filter for the main speakers. It engages on its own whenever a subwoofer is connected. Once active, the filter removes the deepest bass from the main speakers so they can focus on the midrange and higher frequencies, while the subwoofer handles the lowest frequencies. This lets the speakers and subwoofer work together more efficiently for deeper, more controlled bass.

3 Additional Features (Continued)

Left/Right Channel Swap

You can select which speaker outputs the left or right channel on the Yu4. This is useful when speaker placement or power-outlet access would otherwise put your channels on the wrong sides, letting you preserve the correct stereo image in any layout.

The active speaker side is set by the rocker switch on the back of the unit: set to **Left**, the active speaker is your left channel; set to **Right**, the active speaker is your right channel.

Volume Boost for Quiet Sources

To help these sources reach a satisfying listening level, the speaker adds additional digital gain during the highest volume steps.

In the top 5 volume increments, the speaker adds up to +10 dB of extra gain, increasing by +2 dB with each step. This helps low-output devices play louder without requiring additional equipment.

Use caution at maximum volume with high-output sources, such as a full-scale (0 dBFS) digital source. The added gain may cause distortion or unwanted audio artifacts. If you hear distortion at the highest volume levels, reduce the volume slightly.

Automatic Power Up (APU) / Automatic Power Down (APD)

The Yu4 conserves power when not in use. After 15 minutes with no audio signal, the speaker enters standby mode (APD). It wakes and resumes playback (APU) when a signal returns via the same input that was active at standby, or when you press the Power button on the remote or the volume knob.

Both features can be disabled if you prefer. Press and hold the relevant button on the remote:

- **APU —** Press and hold the Treble Reset button for 5 seconds
- **APD —** Press and hold the Bass Reset button for 5 seconds

The front LED blinks once to confirm the feature is disabled. To re-enable it, press and hold the same button again for 5 seconds; the LED blinks twice to confirm.

Factory Reset

Factory Reset restores all settings on the Yu4 to their factory defaults. It is most often used as a troubleshooting step at the direction of customer service.

To perform a factory reset, press and hold the Factory Reset button on the remote for 5 seconds. The front LED blinks to confirm the command has been received, and the speaker returns to its default input.

You're all set—enjoy your new Kanto product.

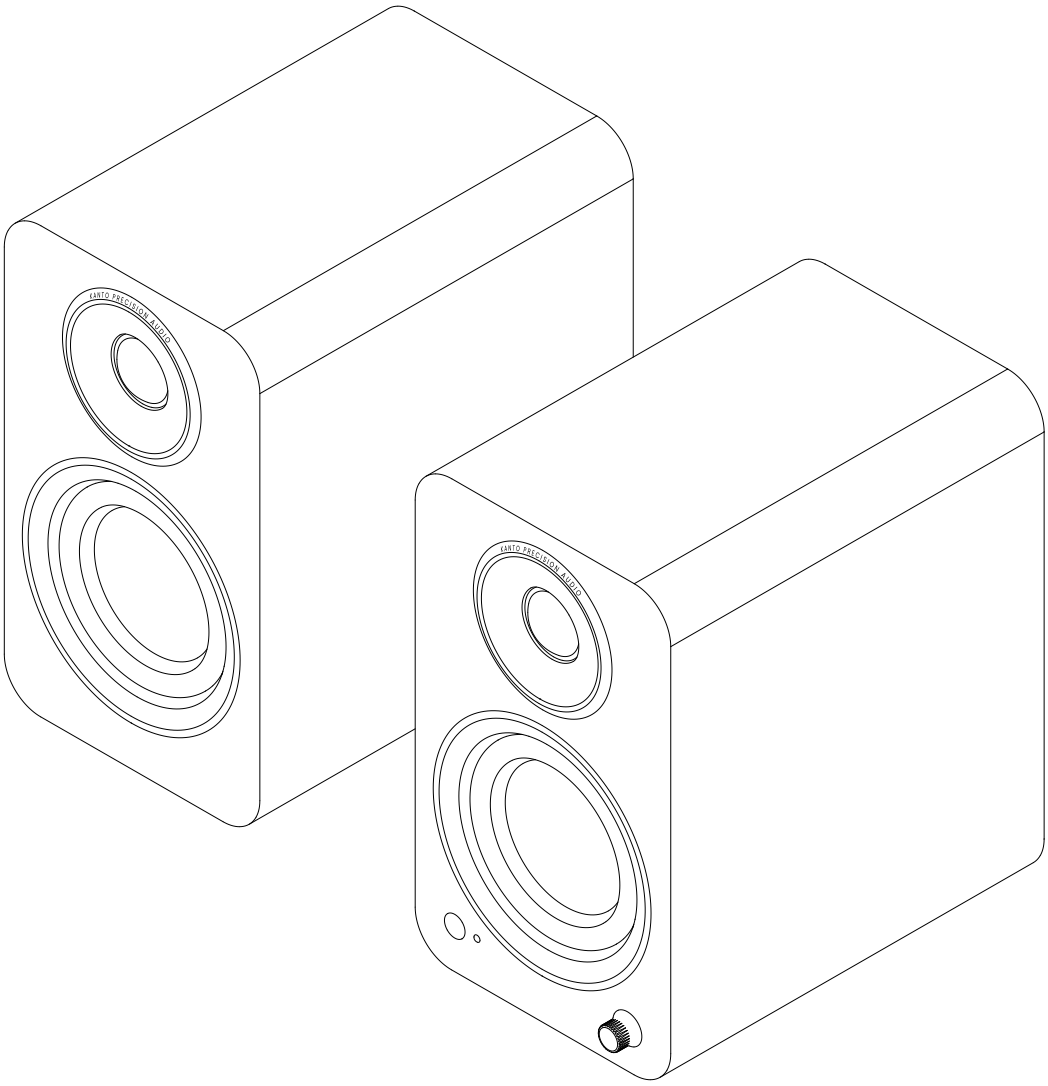

Have questions? Our customer service team is ready to help:
support@kantoliving.com

Troubleshooting Guide

This guide addresses common issues you might encounter with Yu4 Speakers. If you experience a problem not listed here, or if the suggested solutions do not resolve the issue, please consult your retailer or contact customer support for further assistance.

1. The front LED is not illuminated.

- Make sure the power cable is connected to the speaker and power outlet.
- Ensure that the power outlet is providing power.
- Verify that the power switch on the rear of the speaker is in the “On” position.

2. The front LED is illuminated but there is no audio playing.

- Make sure the correct input is selected. Click the knob on the front of the speakers to cycle through the five different inputs or use the remote to choose the correct input.
- Set the volume of the source to its highest level. Ensure audio source is playing audio.
- Check that the audio cable connected to and from the source is firmly connected. Test another audio cable if available.
- Verify that the volume of the speaker is not at its minimum level. Turn the volume up using the knob on the front or the volume controls on the remote.

3. Audio is only playing through one speaker.

- Reconnect the speaker wire between the active speaker and passive speaker and ensure the ends of the speaker wire are fastened securely through the binding posts.
- Check that the audio cable connected to and from the source is firmly seated. Try a different cable or source to isolate the issue.

4. Your remote is not functioning correctly.

- Ensure there is a clear line of sight from the remote to the speakers. Aim the remote at the speakers.
- Check battery compartment of remote to make sure the batteries are installed and aligned correctly.
- Replace batteries.

5. Speakers are going into standby while listening to audio.

- Set the volume of the source to its highest level. Low source volume can inadvertently trigger standby mode.

6. You are experiencing poor audio quality.

- Set the volume of the source to its highest level. Low source volume can negatively affect dynamic range.
- Verify that the speaker wire is connected to the same color terminals on the active speaker and passive speaker.
- Ensure that the rear of the speaker is spaced away from the wall by at least 8 inches, allowing the rear port function to be left unimpeded.
- Set the bass and treble levels to the default setting by pressing the EQ reset button on the remote.
- Test a different song or source to isolate the issue.

7. The source will not connect to Bluetooth.

- Ensure the speakers are in Bluetooth mode by clicking the Bluetooth button on the remote or cycle through the inputs by clicking the knob on the front of the speakers until the blue light on the front panel of the speakers starts flashing.
- Make sure the blue light on the front panel of the speakers is flashing, indicating the speakers are in pairing mode. If the blue light is solidly lit, click the Bluetooth reset button on the remote to unpair a previously used device.
- On the source, turn Bluetooth off and on again.
- If the speakers cannot be found while searching for devices on the source, turn off the speakers using the power switch on the rear of the speaker. Switch them back on and try these steps again.

8. You are experiencing buzzing, hissing or distortion.

- If using the optical input, set the source’s output to stereo — not surround, Dolby, DTS, or 5.1 — and set the sample rate to 96 kHz or lower.
- Verify if the noise is coming from the source by removing all sources from the speakers.
- Make sure it is not a power issue by trying a power outlet that is on a different circuit.
- Check that the audio cable connected to and from the source is firmly seated. Try a different cable or source to isolate the issue.

9. There’s no audio coming from an attached subwoofer.

- Check that the RCA cable connected to and from the subwoofer is firmly seated. Try a different cable or source to isolate the issue.
- Make sure the subwoofer is connected to a power outlet and is set to “On” or “Auto”.
- Increase the volume of the subwoofer.

Specifications

Tweeters	1 inch Silk Dome
Woofers	4 inch Abaca Reinforced Paper
Amplifier Type	Class-D
Power Output	110 Watts RMS, 160 W Peak
Frequency Response	60 Hz – 22 kHz
Inputs	1 x 3.5 mm stereo mini-jack Aux 1 x RCA w/ Selectable Phono Switch 1 x Optical (TOSLINK™)(24 bit/96 kHz) 1 x USB-C (24 bit/96 kHz) 1 x Bluetooth® 5.3 (SBC, AAC)
Outputs	1 x Subwoofer 1 x USB Charge Port 5 V, 1.5 A
Speaker Terminals	Left and Right Binding Posts
Input Voltage/Frequency	AC 100 V - 240 V 50/60 Hz (Auto Switching)
Standby Power Consumption	< 0.5 W
Remote	Included
Dimensions (Speaker)	W 5.5" x H 8.1" x D 9.2" (140 x 205 x 233 mm)
Net Weight (Active)	8.2 lb (3.7 kg)
Net Weight (Passive)	6.8 lb (3.1 kg)
Gross Weight	19.8 lb (9 kg)

NOTICE: The Bluetooth® word mark and logos are registered trademarks owned by Bluetooth SIG, Inc. and any use of such marks by Kanto Living Inc. is under license.

NOTICE: This appliance is labeled in accordance with European Directive 2012/19/EU concerning waste electrical and electronic equipment (WEEE). This label indicates that this product should not be disposed of with household waste. It should be deposited at an appropriate facility to enable recovery and recycling.

MANUFACTURER AND IMPORTER:
Kanto Living Inc., 9136 196A Street, Langley, BC, Canada V1M 3B4

KANTO

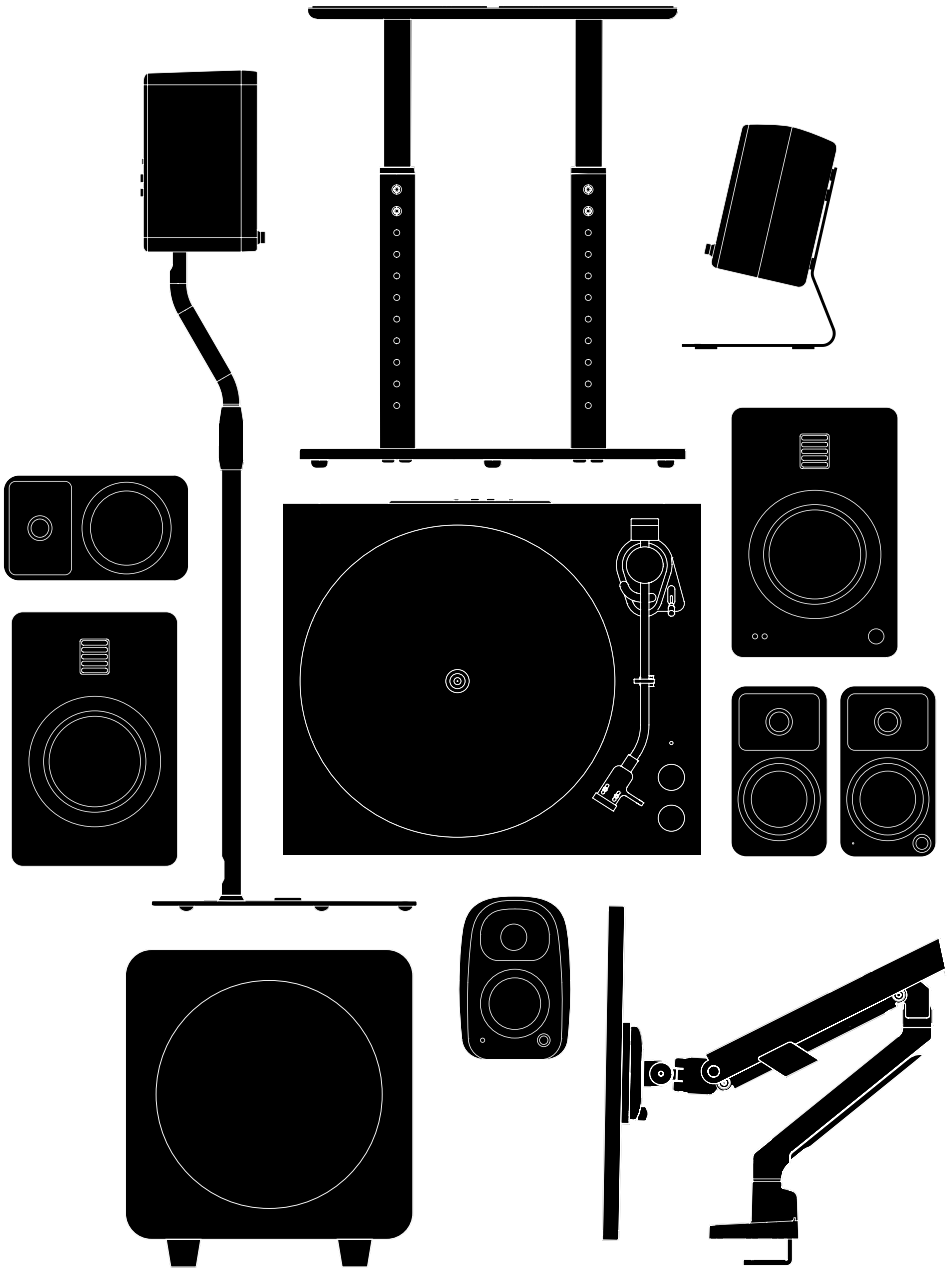

Connecting you to boundless creativity.

Kanto products are designed to elevate your everyday experience with technology. From hi-fi audio solutions to mounts and accessories, it's about more than innovation-it's about creating meaningful moments in the spaces where we live and work.

Explore more at kantoliving.com.

kanto

Limited Warranty

Kanto Living Inc. (Kanto) warrants the equipment it manufactures to be free from defects in material for the limited warranty period of 2 years.

If equipment fails because of such defects and Kanto is notified within 2 years from the date of shipment with proof of original invoice from an authorized reseller, Kanto will, at its option, provide replacement parts or replace the equipment, provided that the equipment has not been subjected to mechanical, electrical, or other abuse or modifications. Any replacement parts or replacement units are warranted for 90 days from the day of reshipment to the original purchaser.

Customers will be responsible for obtaining a Return Authorization Number and paying shipping costs to return product to a Kanto location or authorized depot. If the equipment is covered under the warranty provisions above, Kanto will replace parts or provide a replacement unit, and be responsible for shipping costs to the customer. Please keep the original packaging to prevent damage to the product during shipping. Insuring your shipment is also recommended.

The information in the manual has been carefully checked and is believed to be accurate. However, Kanto assumes no responsibility for any inaccuracies that may be contained in the manual. In no event will Kanto be liable for direct, indirect, special, incidental, or consequential damages resulting from any defect in the equipment, even if advised of the possibility of such damages. This warranty is in lieu of all other warranties expressed or implied, including without limitation, any implied warranty, including any warranty of merchantability and fitness for any particular purpose, all of which are expressly disclaimed.

Important Safety Precautions

CAUTION

RISK OF ELECTRIC SHOCK
DO NOT OPEN

ATTENTION: The exclamation point within an equilateral triangle is intended to alert the user of the presence of important operating and maintenance (servicing) instructions in the literature accompanying the apparatus.

CAUTION: To reduce the risk of electric shock, do not remove back panel. No user serviceable parts inside. Refer servicing to qualified service personnel.

DANGEROUS VOLTAGE: The lightning flash with arrowhead, within an equilateral triangle, is intended to alert the user of the presence of non-insulated “dangerous voltage” within the product’s enclosure that may be of sufficient magnitude to constitute a risk of electric shock to persons.

- Read these instructions.
- Keep these instructions.
- Heed all warnings.
- Follow all instructions.
- Do not use this apparatus near water.
- Clean only with a dry cloth.
- Do not block any openings. Install in accordance with the manufacturer’s instructions.
- Do not install near any heat sources such as radiators, heat registers, stoves, or other apparatus (including amplifiers) that produce heat.
- Protect the power-supply cord from being walked on or pinched, particularly at plugs, convenience receptacles and the point where they exit from the apparatus.
- When a stand is used, use caution when moving the stand/apparatus combination to avoid injury from tip-over.
- Unplug this apparatus during lightning storms or when unused for long periods of time.
- Refer all servicing to qualified service personnel. Servicing is required when the apparatus has been damaged in any way, such as power-supply cord or plug is damaged, liquid has been spilled or objects have fallen into the apparatus, the apparatus has been exposed to rain or moisture, the apparatus does not operate normally, or the apparatus has been dropped.
- Apparatus shall be connected to a MAINS socket outlet with a protective earthing connection.
- An appliance input coupler is used as the disconnect device - the disconnect device shall remain readily operable.

FCC Warnings / IC Warning

FCC WARNINGS: This device complies with part 15 of the FCC Rules. Operation is subject to the following two conditions: (1) This device may not cause harmful interference, and (2) this device must accept any interference received, including interference that may cause undesired operation.

Any changes or modifications not expressly approved by the party responsible for compliance could void the user's authority to operate the equipment.

Note: This equipment has been tested and found to comply with the limits for a Class B digital device, pursuant to part 15 of the FCC Rules. These limits are designed to provide reasonable protection against harmful interference in a residential installation. This equipment generates uses and can radiate radio frequency energy and, if not installed and used in accordance with the instructions, may cause harmful interference to radio communications. However, there is no guarantee that interference will not occur in a particular installation. If this equipment does cause harmful interference to radio or television reception, which can be determined by turning the equipment off and on, the user is encouraged to try to correct the interference by one or more of the following measures:

-Reorient or relocate the receiving antenna.
-Increase the separation between the equipment and receiver.
-Connect the equipment into an outlet on a circuit different from that to which the receiver is connected.
-Consult the dealer or an experienced radio/TV technician for help. This equipment complies with FCC radiation exposure limits set forth for an uncontrolled environment. This equipment should be installed and operated with minimum distance 20cm between the radiator & your body.

IC WARNING: This radio transmitter has been approved by Industry Canada. This Class B digital apparatus complies with Canadian standard ICES-003. This device complies with Industry Canada License exempt RSS standard(s). Operation is subject to the following two conditions.

(1)This device may not cause interference, and (2) this device must accept any interference, including interference that may cause undesired operation of the device.

This equipment complies with ISED radiation exposure limits set forth for an uncontrolled environment. This equipment should be installed and operated with minimum distance 20cm between the radiator & your body.

Avertissements FCC / Industrie Canada (IC)

AVERTISSEMENTS FCC: Cet appareil est conforme à la partie 15 des règles de la FCC. Son fonctionnement est soumis aux deux conditions suivantes: (1) cet appareil ne doit pas causer d'interférences nuisibles, et (2) cet appareil doit accepter toute interférence reçue, y compris les interférences qui pourraient provoquer un fonctionnement indésirable.

Tout changement ou modification non expressément approuvé par la partie responsable de la conformité peut invalider l'autorité de l'utilisateur à faire fonctionner l'équipement.

Note: Cet équipement a été testé et déclaré en accord avec les limites d'un appareil numérique de classe B, conformément à la partie 15 des règles de la FCC. Ces limites sont conçues pour fournir une protection raisonnable contre les interférences nuisibles dans une installation résidentielle. Cet équipement génère, utilise et peut émettre de l'énergie de fréquence radio et, s'il n'est pas installé et utilisé conformément aux instructions, peut causer des interférences nuisibles aux communications radio. Cependant, il n'y a aucune garantie que des interférences ne se produiront pas dans une installation particulière. Si cet équipement provoque des interférences nuisibles à la réception de la radio ou de la télévision, ce qui peut être déterminé en éteignant et en allumant l'équipement, l'utilisateur est encouragé à essayer de corriger les interférences en prenant l'une ou plusieurs des mesures suivantes:

-Réorientez ou déplacez l'antenne de réception.
-Éloignez l'équipement du récepteur.
-Branchez l'appareil sur une prise de courant située sur un circuit différent de celui sur lequel le récepteur est branché.
-Consultez le revendeur ou un technicien de radio ou téléviseur expérimenté pour obtenir de l'aide. Cet appareil est conforme aux limites d'exposition aux radiations fixées par la FCC pour un environnement non contrôlé. Cet appareil doit être installé et utilisé avec une distance minimale de 20 cm entre le radiateur et votre corps.

INDUSTRIE CANADA (IC): Le présent appareil est conforme aux CNR d'Industrie Canada applicablesaux appareils radio exempts de licence. L'exploitation est autorisée aux deux conditions suivantes:

(1) l'appareil ne doit pas produire de brouillage, et (2) l'utilisateur de l'appareil doit accepter tout brouillage radioélectrique subi, même si le brouillage est susceptible d'en compromettre le fonctionnement.

Cet équipement est conforme aux limites d'exposition au rayonnement ISED établies pour un environnement non contrôlé. Cet équipement doit être installé et utilisé à une distance minimale de 20 cm entre le radiateur et votre corps.