we:boost

Installation Guide

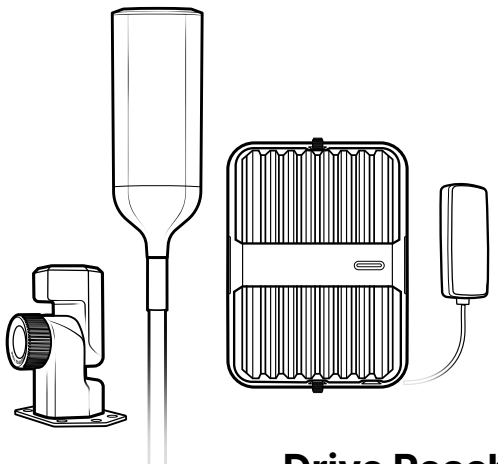

Drive Reach Overland

Cellular Signal Booster

Use our **weBoost App** to guide you through the installation. See inside page for more details.

Download the weBoost App

Use our app to guide you through setting up a weBoost cell phone signal booster in your home, business, or vehicle. Boost every network, including 5G, right away.



Index

Package Contents 1
Installation Overview 3
STEP 1 Assemble the Outside Antenna 5
STEP 2 Mounting the Outside Antenna with Overland Mounting Bracket 7
STEP 3 Mount the Inside Antenna 14
STEP 4 Booster Location & Connect Coax Cables 15
STEP 5 Connect Power Supply to Booster 17
Booster Light Patterns 18
Troubleshooting 20
Safety Guidelines 22
Antenna Info 24
Specifications 25
Warranty 26

Package Contents

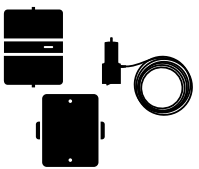

Drive Reach Signal Booster, Bracket & Power Supply

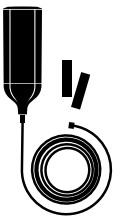

Outside Antenna, 14 ft. Cable & Heat Shrink Tubes

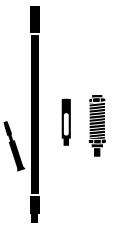

13 in. Mast Ext., Side-Exit Adapter, Spring & Thread Lock Pack



Inside Antenna



Overland Mounting Bracket & Mounting Hardware

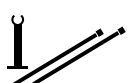

Stabilizer Arm & Zip Ties

Compatible Aftermarket Accessories

952315 - 18 ft. (5.5 m) Cable for Outside Antenna

- This cable can be used to add 4 feet (1.2 meters) to outside antenna. Used for larger vehicles, not recommended unless longer cable is the only option to complete install.

311160 - Desktop Antenna

- Optional desktop in-vehicle antenna adds flexibility to broadcast boosted signal in different areas of an RV, such as a dining table or nightstand. This is an option for class B RVs when using the product primarily in the back of the vehicle.

991129 - 18 in. (45.7 cm) Mast for Outside Antenna

- This mast can be used to extend the height of the outside antenna to clear obstructions on top of the vehicle.

950079 - Hardwire Power Supply

- This can be used to hardwire the power rather than using the cigarette lighter in the vehicle.

Installation Overview

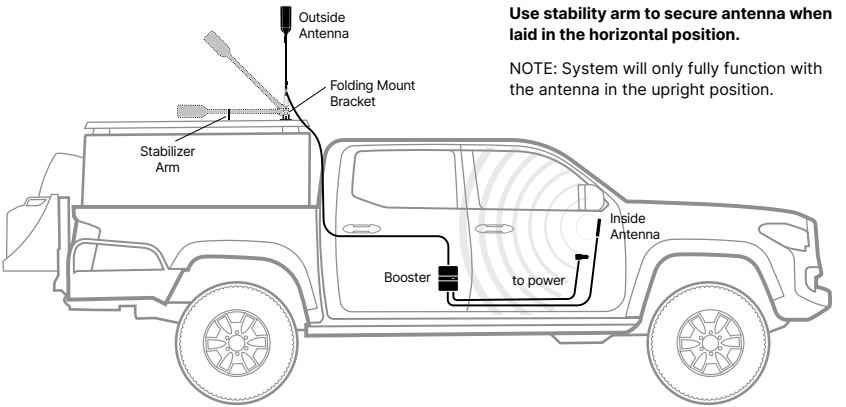

Use stability arm to secure antenna when laid in the horizontal position.

NOTE: System will only fully function with the antenna in the upright position.

Works with Different Overland Vehicle Types



Best Outside Antenna Position

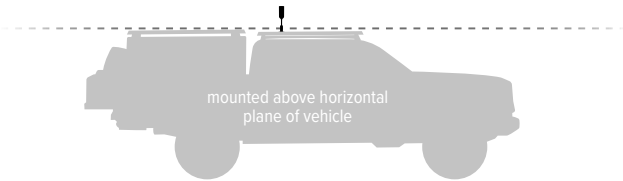

For best performance the outside antenna should be mounted above the horizontal plane of the vehicle and/or above other gear on top of the vehicle.

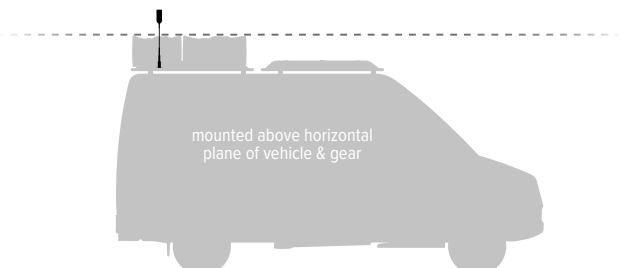

STEP 1 Assemble the Outside Antenna

The antenna should be mounted above gear on top of the vehicle. Once you have determined the best location for the outside antenna, **insert coax cable through mast extension (mast can be used optionally), then through side-exit adapter.**

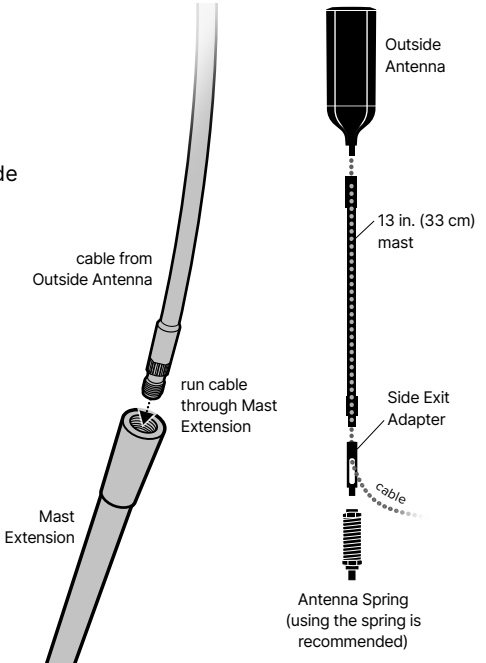

(STEP 1 cont.)

After determining outside antenna assembly is the correct height, **apply the thread locker** precisely to thread points only (not plastic body of antenna). **Screw mast onto antenna.**

Connect 14-foot cable to outside antenna cable. Heat shrink tube can be applied to the connection (optional).

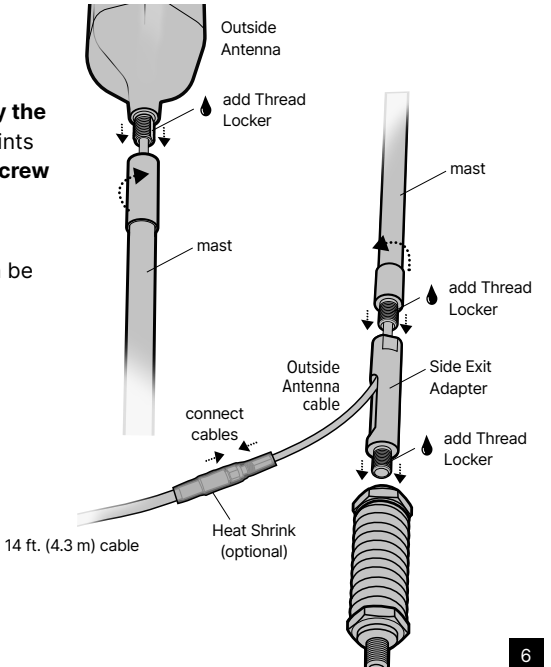

STEP 2 Mount the Outside Antenna with Overland Mounting Bracket

This kit includes a **folding mounting bracket** (can be secured at 90°, 45°, 135° or horizontal). This makes it easier to install the **outside antenna to different types of overland vehicles.** The overland folding mounting bracket is very versatile with different mounting options.

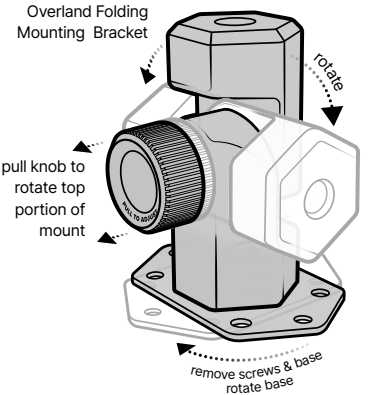

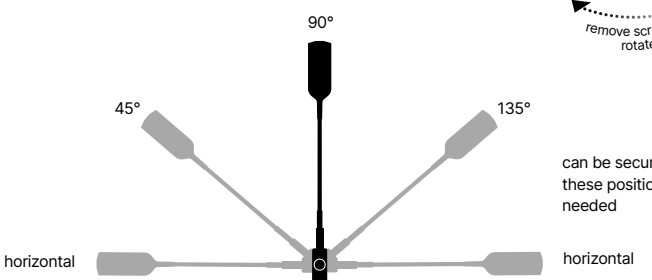

NOTE: System will only fully function with the antenna in the upright position.

(STEP 2 cont.)

T-Track Mounting Option

For vehicles with t-track roof rack systems, the provided mounting bracket can be mounted to the roof rack. **Use the t-track mounting hardware** to secure the bracket to roof rack, then screw in assembled outside antenna.

NOTE: Some t-track roof rack systems may not be compatible with included channel nuts. M6 channel nuts may be needed to complete installation.

An antenna stabilizer is provided to secure antenna when folded down.

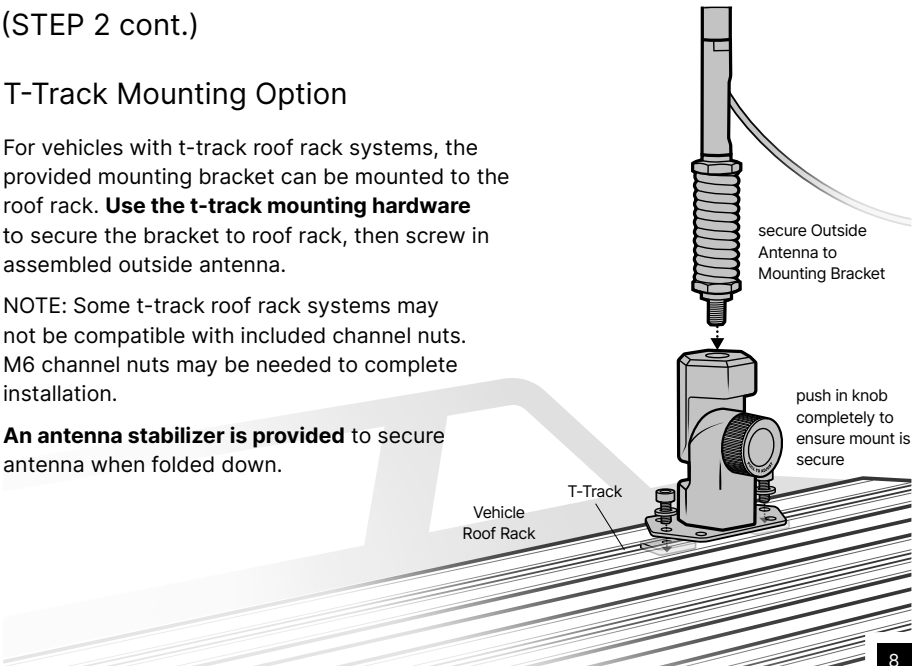

(STEP 2 cont.)

T-Track Mounting Option Folded Down

The stabilizer arm can be used to secure the outside antenna in the horizontal position. **Insert stabilizer arm into t-track, zip tie can be used to secure it in place.**

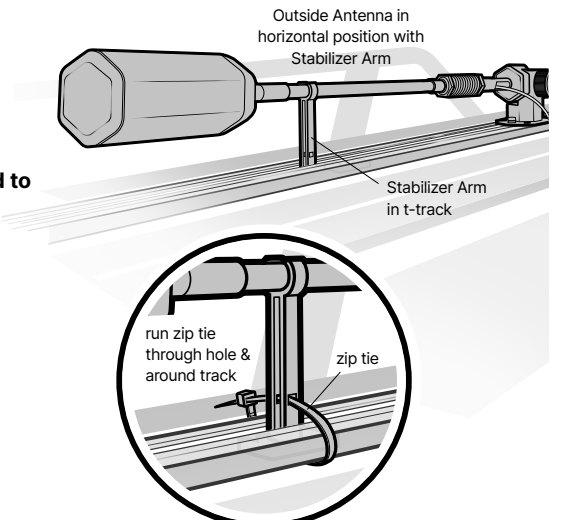

(STEP 2 cont.)

Pole Mounting Option

Brackets, hardware and non-slip rubber pad are also provided for securing the folding mounting bracket to 1.0-1.25 inch diameter poles, like roof rails or ladders.

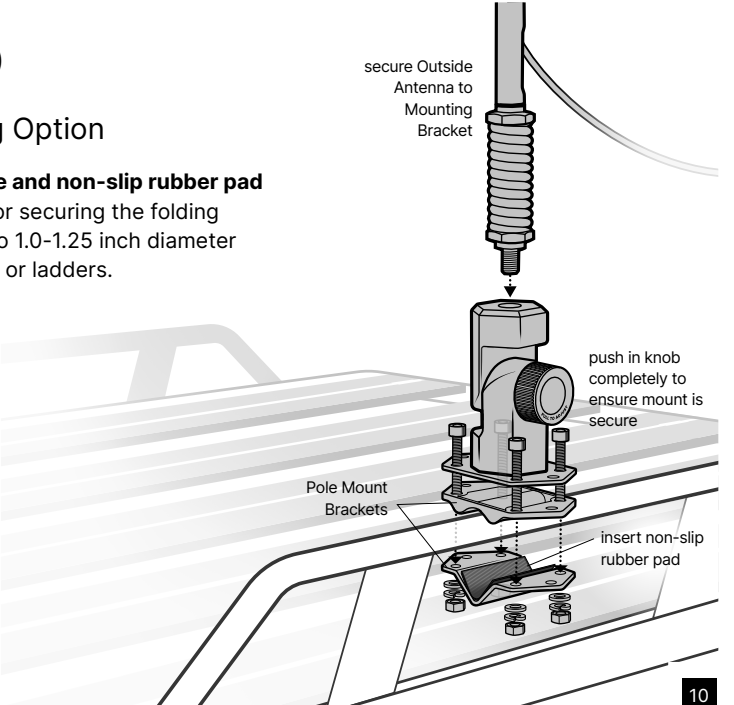

(STEP 2 cont.)

Pole Mounting Option
Folded Down

Stabilizer arm can be used on poles by securing with **zip ties,** as shown.

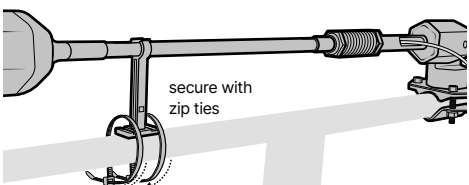

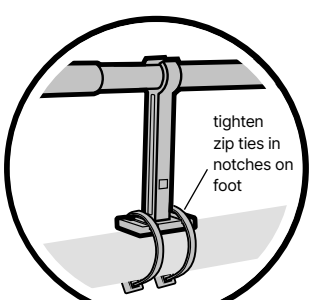

(STEP 2 cont.)

Fixed Mounting Option

The folding mounting bracket can also be secured to a flat surface using the provided hardware as shown here.

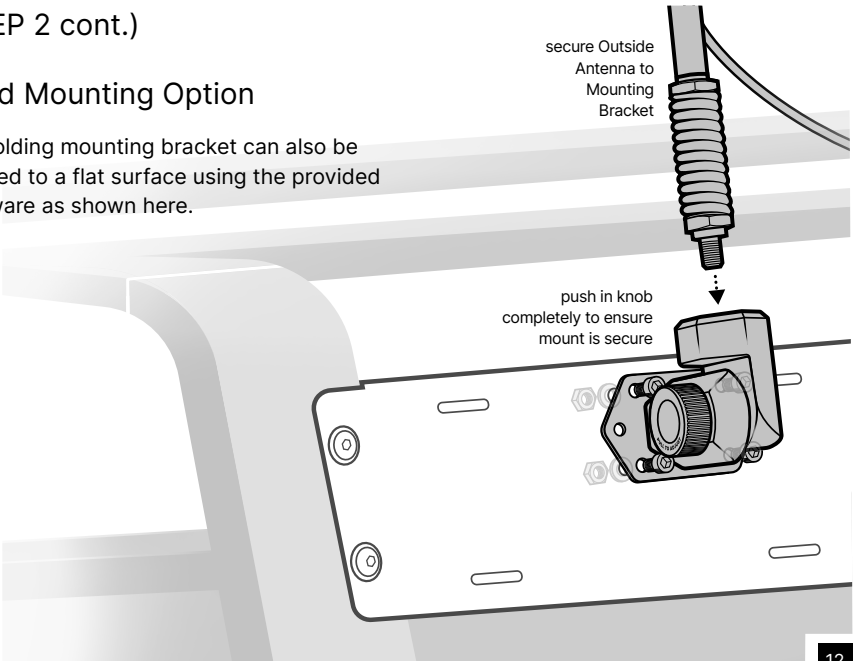

(STEP 2 cont.)

Route Cable into Vehicle

Once the outside antenna is mounted and secured, **route the coax cable into the vehicle.** *The cable is strong enough that it may be shut in most vehicle doors without damage.*

NOTE: Cable should only be routed through vehicle door.

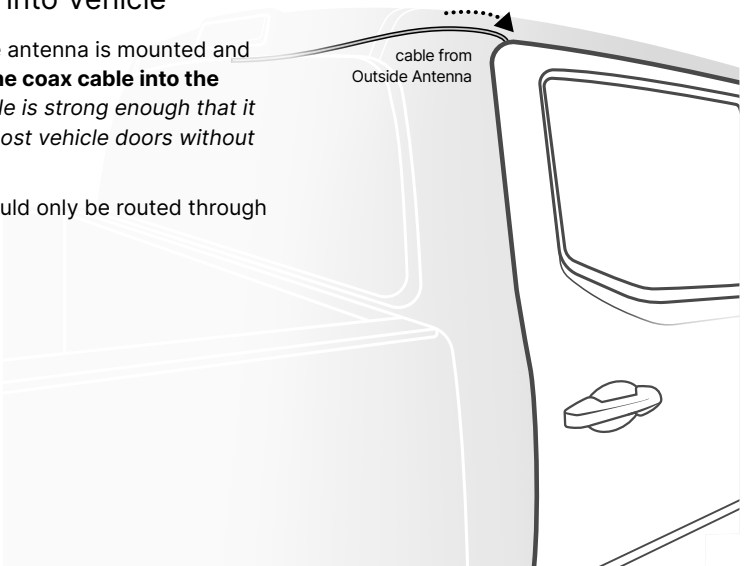

STEP 3 Mount the Inside Antenna

Identify a place to mount the inside antenna.
Mount it either on the dash or the side of the seat. The antenna should be placed at least *18 inches but no more than 36 inches* from where the cellular device will be used. Use the Velcro® adhesive strip/adhesive strip provided and attach to desired location.

NOTE: Do not mount the inside antenna where an airbag will deploy.

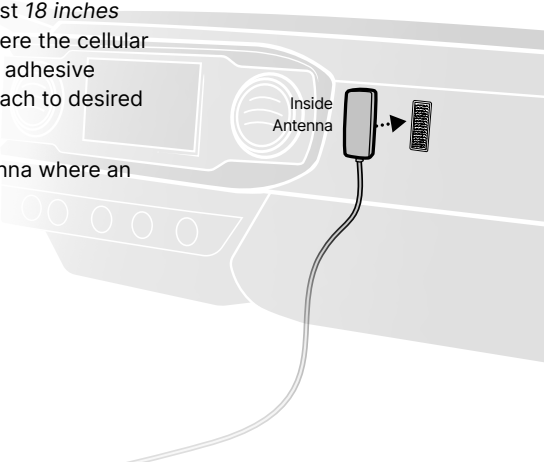

STEP 4 Booster Location & Connect Coax Cables

Find a accessible location to place the booster that has good air flow. The booster includes a mounting bracket that provides different mounting options. It can be secured with Velcro® strips, screws or zip ties. Securing the booster with Velcro® behind or under the seat is a good option.

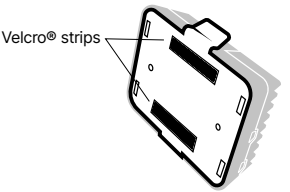

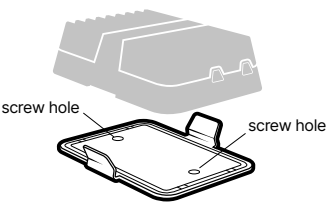

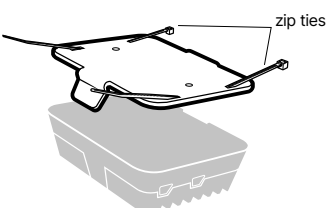

(STEP 4 cont.)

Connect the coax cable from the outside antenna to the port labeled “Outside Antenna” on the booster. Then **connect the cable** from the inside antenna to the port labeled “Inside Antenna” on the booster.

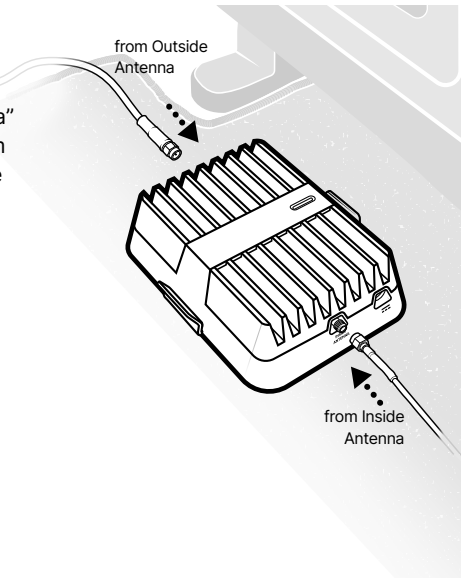

STEP 5 Connect Power Supply to Booster

Connect the 12V power supply cord to the end of the booster, labeled "12V DC." Then plug the power adapter into vehicle's 12V DC power supply. Push switch to ON position. If your Drive Reach is working correctly, the light on the booster will be green. *Use only the power supply provided in this package.*

NOTE: If the 12V cigarette lighter port on your car is always on (even when your vehicle is turned off) and you will be parking for extended periods of time (more than a day), we recommend you turn the booster off by pushing power cord switch to OFF position. This will prevent the Drive Reach from draining the battery in your vehicle.

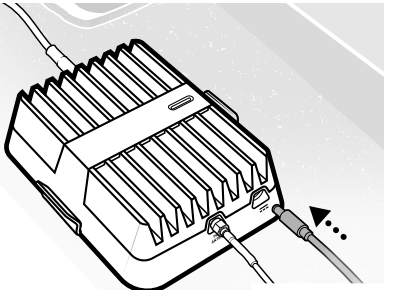

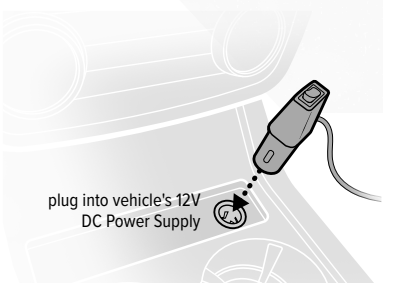

Booster Light Patterns

SOLID GREEN

This indicates that your Drive Reach booster is functioning properly and there are no issues with installation.

SOLID RED

Band has shutoff. This is due to a feedback loop condition called oscillation. This is a built in safety feature that causes a band to shut off to prevent harmful interference with a nearby cell tower. Refer to Troubleshooting section.

BLINKING RED, THEN SOLID GREEN

This indicates that one or more of the booster bands has reduced power due to a minor feedback loop condition called oscillation. This is a built in safety feature to prevent harmful interference with a nearby cell tower. If you are already experiencing the desired signal boost, then no further adjustments are necessary. If you are not experiencing the desired boost in coverage then refer to the Troubleshooting section.

LIGHT OFF

If the Drive Reach signal booster's light is off, verify your power supply has power.

(Booster Light Patterns cont.)

NOTE: The signal booster can be reset by disconnecting and reconnecting the power supply.

After troubleshooting, you must initiate a new power cycle by disconnecting and then reconnecting power to the booster.

Troubleshooting

FIXING BLINKING OR RED LIGHT ISSUES

This section is only applicable if the light on the booster is red or blinking red and you are not experiencing the desired signal boost.

1 Unplug the booster's power supply.

2 Relocate the inside and outside antenna further from each other. The objective is to increase the separation distance between them, so that they will not create this feedback condition discussed before.

3 Plug power supply back in and ensure switch is in ON position.

4 Monitor the indicator light on your booster. If, after a few seconds of 'power on', a solid or blinking red light appears, repeat steps 1 through 3. Increase the separation distance until the condition is corrected and/or desired coverage area is achieved. Note: Horizontal separation of the two antennas typically requires a shorter separation distance than vertical separation.

If you are having any difficulties while testing or installing your booster, contact our weBoost Customer Support team for assistance (1-866-294-1660).

(Troubleshooting cont.)

FREQUENTLY ASKED QUESTIONS

How can I contact customer support?
Customer Support can be reached Monday through Friday by calling 1-866-294-1660, or through our support site at support.weboost.com.

Why do I need to create distance between the outside antenna and inside antenna?
Antennas connected to a booster create spheres of signal. When these spheres overlap, a condition called oscillation occurs. Oscillation can be thought of as noise, which causes the booster to scale down its power or shut down to prevent damage. The best way to keep these spheres of signal from overlapping is to maximize separation between the inside and outside antennas.

Safety Guidelines

Use only the power supply provided in this package. Use of a non-weBoost product may damage your equipment.

Connecting this signal booster directly to the cell phone with use of an adapter will damage the cell phone.

RF Safety Warning: Any antenna used with this device must be located at least 8 inches (20 cm) from all persons.

AWS Warning: The Outside Antenna must be installed no higher than 31 feet 9 inches (10 meters). above ground.

This is a CONSUMER device.

BEFORE USE, you **MUST REGISTER THIS DEVICE** with your wireless provider and have your provider's consent. Most wireless providers consent to the use of signal boosters. Some providers may not consent to the use of this device on their network. If you are unsure, contact your provider.

In Canada, **BEFORE USE** you must meet all requirements set out in ISED CPC-2-1-05.

You **MUST** operate this device with approved antennas and cables as specified by the manufacturer. Antennas **MUST** be installed at least 20 cm (8 inches) from (i.e., **MUST NOT** be installed within 20 cm of) any person.

You **MUST** cease operating this device immediately if requested by the FCC (or ISED in Canada) or licensed wireless service provider.

WARNING. E911 location information may not be provided or may be inaccurate for calls served by using this device.

FOR MORE INFORMATION ON REGISTERING YOUR SIGNAL BOOSTER WITH YOUR WIRELESS PROVIDER IN THE U.S., PLEASE GO TO THE LINK BELOW:

https://www.weboost.com/carrier-registration

Antenna Info

The following accessories are certified by the FCC to be used with the Drive Reach Booster.

This radio transmitter 4726A-460061 has been approved by Innovation, Science and Economic Development Canada to operate with the antenna types listed below, with the maximum gain indicated. Antenna types not included in this list that have a gain greater than the maximum gain indicated for any type listed are strictly prohibited for use with this device.

	BAND 12/17	BAND 13	BAND 5	BAND 4	BAND 25/2
Outside antenna maximum permissible antenna gain (dBi) 50Ω	1.2	1.2	1.1	0.8	0.4
Inside antenna maximum permissible antenna gain (dBi) 50Ω	2.1	2.6	3.20	2.1	2.7

MOBILE INSIDE ANTENNA KIT OPTIONS				
Kit #	**Coax Type**	**Ln(ft/m)**	**Antenna Type**	**Ω**
314401	LMR-100	10 / 3	Slim Low Profile SMA	50
311160	RG-58	13 / 4	Desktop	50

MOBILE OUTSIDE ANTENNA KIT OPTIONS				
Kit #	**Coax Type**	**Ln(ft/m)**	**Antenna Type**	**Ω**
311216	LMR-100	10 / 3	Mini-Mag SMA	50
311229	RG-58	15 / 4.5	Trucker	50
311230	RG-6	25 / 7.6	RV OTR	75
314405	RG-58	14 / 4.2	NMO	50

Specifications

Drive Reach Cell Signal Booster					
Model	460061				
FCC	PWO460061				
IC	4726A-460061				
Connectors	SMA-Female				
Antenna Impedance	50 Ohms				
Frequency	698-716 MHz, 728-756 MHz, 777-787 MHz, 824-894 MHz, 1850-1995 MHz, 1710-1755/2110-2155 MHz				
Power output for single cell phone (Uplink) dBm	**700 MHz B12/17** 25.4	**700 MHz B13** 25.6	**800 MHz B5** 25.6	**1700 MHz B4** 26.7	**1900 MHz B2** 26.9
Power output for single cell phone (Downlink) dBm	4.8	4.8	4.8	4.6	4.5
Noise Figure	5 dB (nominal)				
Isolation	> 90 dB				
Power Requirements	12V 1.8A				

Each Signal Booster is individually tested and factory set to ensure FCC compliance. The Signal Booster cannot be adjusted without factory reprogramming or disabling the hardware. The Signal Booster will amplify, but not alter incoming and outgoing signals in order to increase coverage of authorized frequency bands only. If the Signal Booster is not in use for five minutes, it will reduce gain until a signal is detected. If a detected signal is too high in a frequency band, or if the Signal Booster detects an oscillation, the Signal Booster will automatically turn the power off on that band. For a detected oscillation the Signal Booster will automatically resume normal operation after a minimum of 1 minute. After 5 (five) such automatic restarts, any problematic bands are permanently shut off until the Signal Booster has been manually restarted by momentarily removing power from the Signal Booster. Noise power, gain, and linearity are maintained by the Signal Booster's microprocessor.

The term "IC" before the radio certification number only signifies that Industry Canada technical specifications were met. This device complies with Part 15 of FCC rules. This device contains licence-exempt transmitter(s)/receiver(s) that comply with Innovation, Science and Economic Development Canada's licence-exempt RSS(s). Operation is subject to the following two conditions: (1) This device may not cause interference, and (2) This device must accept any interference, including interference that may cause undesired operation of the device. Changes or modifications not expressly approved by weBoost could void the authority to operate this equipment.

2 YEAR WARRANTY

weBoost Signal Boosters are warrantied for two (2) years against defects in workmanship and/or materials. Warranty cases may be resolved by returning the product directly to the reseller with a dated proof of purchase.

Signal Boosters may also be returned directly to the manufacturer at the consumer's expense, with a dated proof of purchase and a Returned Material Authorization (RMA) number supplied by weBoost. weBoost shall, at its option, either repair or replace the product.

This warranty does not apply to any Signal Boosters determined by weBoost to have been subjected to misuse, abuse, neglect, or mishandling that alters or damages physical or electronic properties.

Replacement products may include refurbished weBoost products that have been recertified to conform with product specifications.

RMA numbers may be obtained by contacting Customer Support.

DISCLAIMER: The information provided by weBoost is believed to be complete and accurate. However, no responsibility is assumed by weBoost for any business or personal losses arising from its use, or for any infringements of patents or other rights of third parties that may result from its use.

Notes

Notes

we:boost

3301 East Deseret Drive, St. George, UT
1-866-294-1660 www.**weboost**.com support@**weboost**.com

Copyright © 2022 weBoost. All rights reserved. weBoost products covered by U.S. patent(s) and pending application(s)
For patents go to: weboost.com/us/patents